VBUSA CONCRETE FLOOR SLEEVE INSTALL

A United Volleyball Supply, LLC. Company • 14615 NE 91st ST, Bldg B, REDMOND, WA 98052 • 1996-2007© VOLLEYBALLUSA.COM
PH: 1-800-494-3933 • FAX: 425-827-2230

FOR NEW CONSTRUCTION
SHOWING FINAL ASSEMBLY

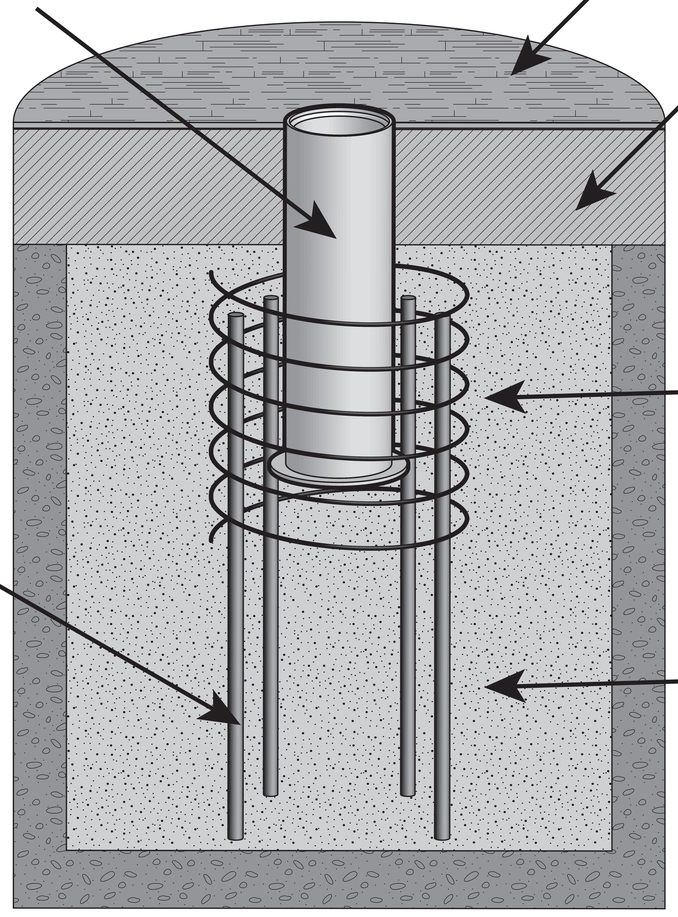
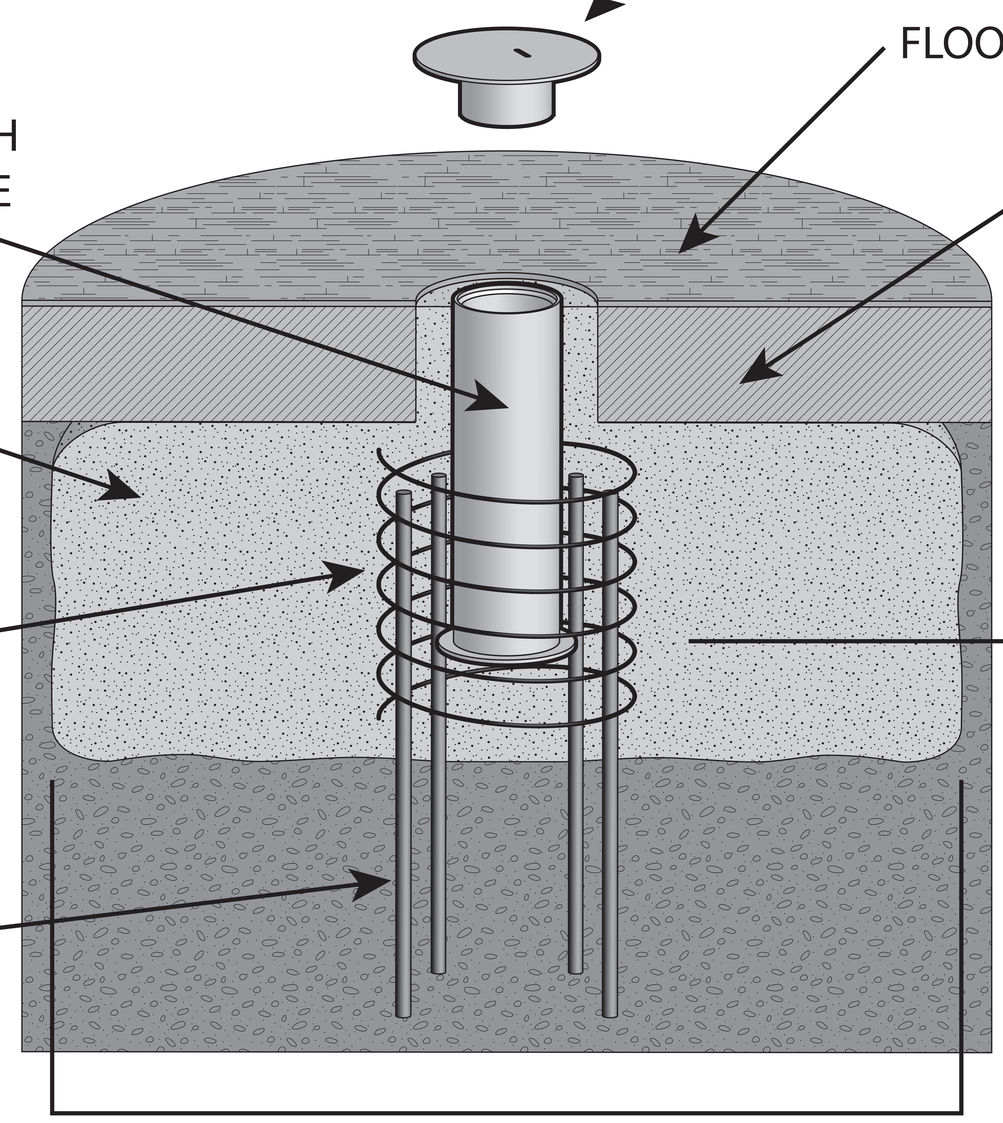
FOR EXISTING CONSTRUCTION
SHOWING FINAL ASSEMBLY